Model Number RMCS-2128	Rhino TT-555 DC 12V 30RPM GEAR MOTOR

Mechanical Drawing (Dimensions are in mm)

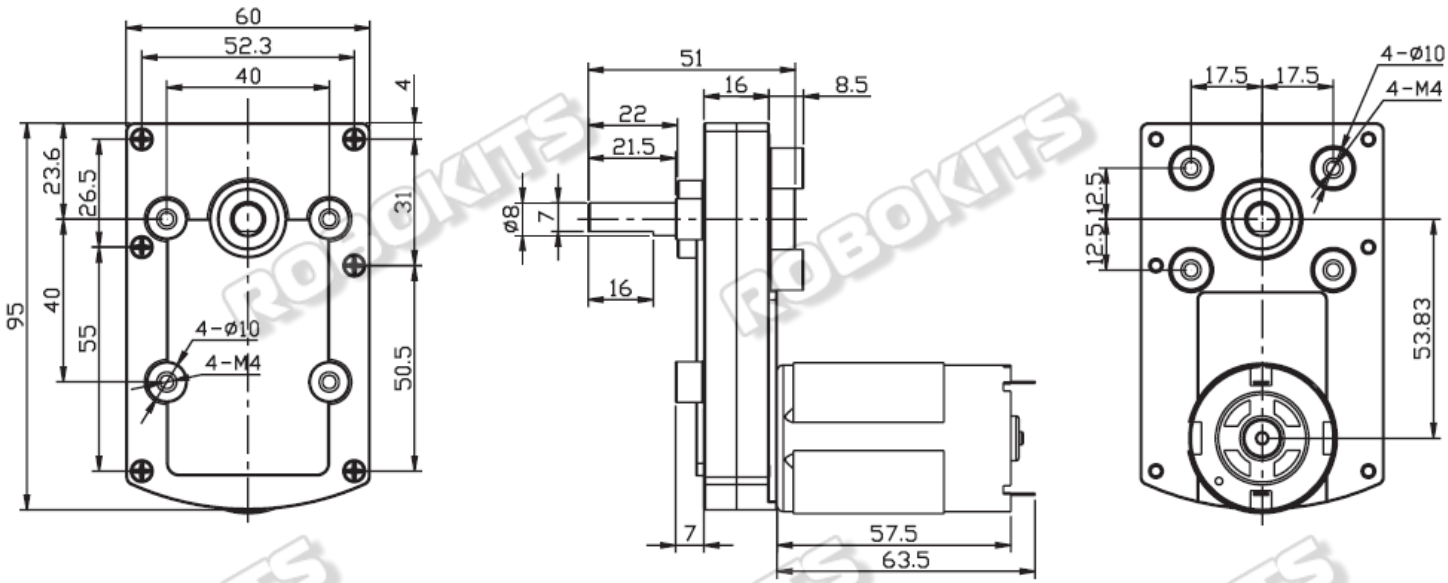

Motor Specifications

Motor Type	TT555 Rectangular Gearbox DC Motor
Operating Voltage	12V DC
Motor Speed at Output Shaft (RPM)	27 - 30 RPM
Rated Torque (Kgcm)	39 Kgcm
Gear Ratio	150:1
Base Motor Rated RPM	4500 RPM
Rated Voltage (VDC)	12 V
No-Load Current	≤370 mA
Rated Current	≤3200 mA
Power Rating	7.186 W

Gear Specifications

Gear Ratio	150:01
No Load Speed (Output)	30 RPM
Rated Speed (Output)	27 - 30 RPM
Rated Torque	39 kg·cm

RHINO

ROBOKITS